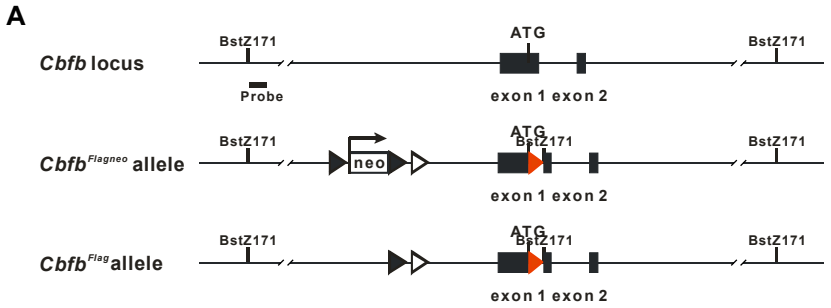
A
Cbfb locus
BstZ171
ATG
BstZ171
Probe
exon 1 exon 2
Cbfb Flagneo allele
BstZ171
neo
ATG
BstZ171
BstZ171
exon 1 exon 2
Cbfb Flag allele
BstZ171
ATG
BstZ171
BstZ171
exon 1 exon 2

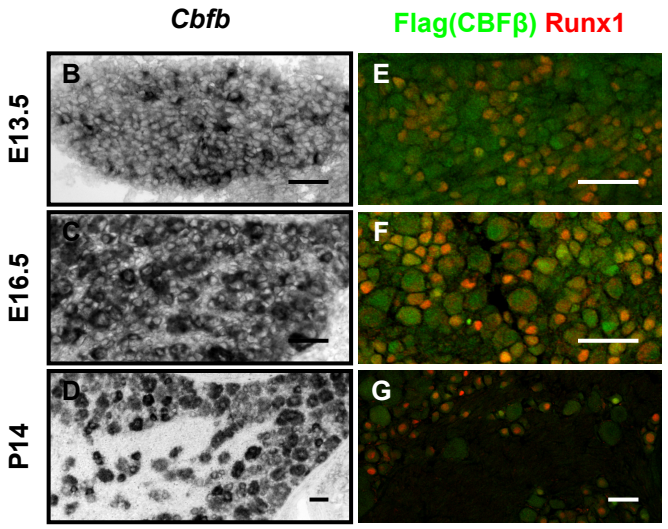
Cbfb
Flag(CBFβ) Runx1
E13.5
E16.5
P14
B
C
D
E
F
G